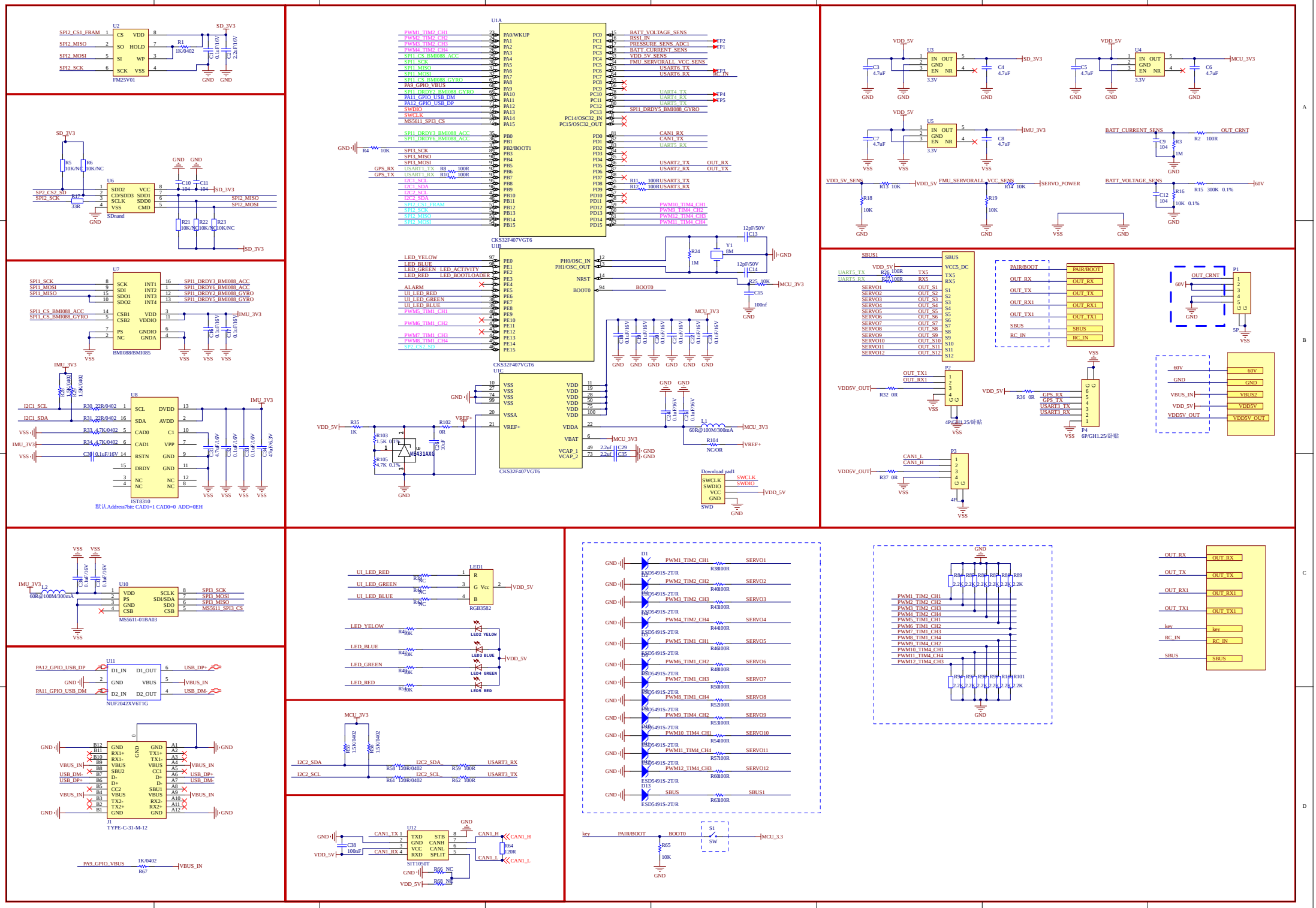

U2
FM25V01
U1A
CKS32F407VGT6
U1B
CKS32F407VGT6
U1C
CKS32F407VGT6
U3
U4
U5
U6
SDnand
U7
BMI088/BMI085
U8
IST8310
默认Address7bit: CAD1=1 CAD0=0 ADD=0EH
U10
MS5611-01BA03
U11
NUF2042XV6T1G
J1
TYPE-C-31-M-12
U12
SIT1050T
LED1
RGB3582
Download pad1
SBUS1
P1
P2
P3
P4
6P/GH1.25/卧贴
D1
D13
S1
SW